Behavior Genetics, Vol. 29, No. 5, 1999

Phenotypic and Genetic Factors in Motives for Smoking

Lynn M. Gynther,[1,4] John K. Hewitt,[1] Andrew C. Heath,[2] and Lindon J. Eaves[3]

Received 10 Jan. 1996—Final 27 July 1999

Underlying phenotypic and genetic factors involving motives for smoking were assessed using data from 1756 twins, including 390 complete pairs. Respondents were aged 50 or older and included both current and former smokers. The Motives for Smoking Questionnaire (MSQ) hypothesizes eight correlated but distinct motives for smoking, which correspond to pharmacological and non-pharmacological second-order factors. This paper concentrates on the pharmacological motives. Principal-factor analysis recovered five categories. Items constituting Sedative, Stimulative, and Addictive reasons for smoking merged into one factor, whereas Automatic smoking, also considered to have pharmacological origins, formed a separate factor. Twin analysis was used to test for genetic effects and to determine whether these factors, although combined phenotypically, were affected by distinct genetic or environmental influences. Genetic effects accounted for a significant amount of the variance in the four hypothesized pharmacological motives for smoking, as did shared environment. The separate factor for Automatic smoking in the phenotypic analysis was due to environmental effects, and shared environment was a greater influence on Automatic smoking for women than men. One common effect explained the genetic variance; no genetic influence uniquely affected any specific motive. Therefore, individual differences in the hypothesized pharmacological motives for smoking appear to originate from a common genetic pathway.

KEY WORDS: Smoking; pharmacological motives; Motives for Smoking Questionnaire; phenotypic factors; genetic factors.

INTRODUCTION

When asked, cigarette smokers offer a variety of reasons why they smoke and circumstances when or where they smoke. A number of studies (Ikard *et al.*, 1969; McKennell, 1970; Russell *et al.*, 1974; Tate *et al.*, 1994) have organized these motives for smoking into subtypes or factors, in part so that individual smokers could be categorized according to their predominant motives for smoking. Such a categorization could contribute to a better understanding of the roles of social and biochemical influences on smoking behavior.

Although several twin studies have identified a genetic component to whether the smoking habit is acquired (Boomsma *et al.*, 1994; Carmelli *et al.*, 1992; Heath and Madden, 1995; Heath *et al.*, 1993; Heath and Martin, 1993; Hughes, 1986), none have examined genetic contributions to motives for smoking. Structural modeling of the genetic and environmental factors influencing these reported behaviors can be used to test underlying assumptions of why people smoke.

Individual differences in motives for smoking might have origins in the genetic characteristics of individuals or in social learning or personal experiences. The organization of motives into subtypes or factors may reflect the differential influence of specific genetic pathways or, alternatively, genetic influences could promote a general disposition to the smoking habit while environmental experiences lead to specific patterns of behavior and reported motives.

The earliest typology of smoking motives hypothesized that smokers differed on affect management: some smoked to increase pleasant feelings, others to reduce unpleasant feelings, some because they were addicted,

[1] University of Colorado, Boulder, Colorado.
[2] Washington University School of Medicine, St. Louis, Missouri.
[3] Medical College of Virginia, Richmond, Virginia.
[4] To whom correspondence should be addressed at Institute for Behavioral Genetics, Campus Box 447, University of Colorado, Boulder, Colorado 80309-0447. Fax: 303-492-8063.

0001-8244/99/0900-0291$16.00/0 © 1999 Plenum Publishing Corporation

This article is for individual use only and may not be further reproduced or stored electronically without written permission from the copyright holder.
Unauthorized reproduction may result in financial and other penalties. (c) KLUWER ACADEMIC/PLENUM PUBL

PM3001487755

Source: https://www.industrydocuments.ucsf.edu/docs/pyyj0001

entailing both positive and negative effect, and others out of habit unrelated to effect (Ikard *et al.*, 1969; Tomkins, 1968). Another typology classified smokers according to occasions when they were likely to smoke (McKennell, 1970). Russell *et al.* (1974) derived a questionnaire incorporating features of these two typologies and recovered six correlated factors, not including the hypothesized Sedative factor. Three factors appeared to represent a pharmacological dimension and three a nonpharmacological dimension, both of which were theorized as capable of leading to nicotine dependence. A study including the highest-loading items from the latter factor analysis, administered to a larger sample, had similar results, with the addition of Sedative smoking as a separate factor (Tate *et al.*, 1994).

Representative names for the most commonly replicated motives are Addictive (cravings), Automatic (theoretically nonconscious or habitual smoking, but similar to chain-smoking), Stimulative (smoking when busy, theoretically for arousal), Sedative (smoking when upset, theoretically to reduce tension), Social (smoking socially or for social confidence), Indulgent (smoking when relaxed), and Sensorimotor (cigarette manipulation). The first four motives have been considered pharmacological and the latter three nonpharmacological.

In Russell *et al.*'s 1974 study, a smoking cessation clinic sample scored higher on the pharmacological scales than a sample of regular smokers. Among the regular smokers, all scales except Psychosocial and Sensorimotor were significantly correlated in a positive direction with number of cigarettes smoked per day. Other studies have shown a positive association between the pharmacological motives and criteria such as withdrawal severity, carbon monoxide levels, plasma cotinine concentration, cigarettes per day, and years smoked (Niaura *et al.*, 1989; Tate *et al.*, 1994; Tate and Stanton, 1990; West *et al.*, 1986; West and Russell, 1985). The relationship of Indulgent smoking to criterion variables, however, has been inconsistent, as has been the retrieval of Sedative smoking as a separate factor.

Researchers have tried to distinguish sedative and stimulative motives for smoking because of the paradox that, although nicotine is a stimulant, people report increased tranquility when using the drug (Frith, 1971; Gilbert, 1979). At the ganglionic receptors, nicotine produces dose-dependent stimulative or depressant effects (Clarke, 1987). Furthermore, in animal models, acute doses of nicotine elicit differential effects on activity for mice of separate inbred strains (Marks *et al.*, 1989).

The purpose of the present study was to examine the phenotypic relationships among the items used in determining motives for smoking and, in addition, to evaluate whether the different pharmacological motives for smoking were affected by separate or similar genetic pathways.

METHOD

Subjects

Subjects consist of 1756 smokers who answered the Motives for Smoking Questionnaire (SMQ) included in the Health, Habits and Opinions (HHO) survey returned by 4119 men and women over 50 years of age. The HHO survey, which has been described previously (Prescott *et al.*, 1994), was mailed from late 1990 to early 1991 to a previously ascertained sample of older Caucasian twins. Respondents were originally recruited through a notice in the American Association of Retired Persons (AARP) newsletter. The HHO twin sample, although younger and better educated, was similar in smoking habits to a randomly identified subject pool of AARP members who voluntarily returned surveys in an unrelated study (Rimer *et al.*, 1990).

When asked to characterize their smoking history, 41.8% of the women (1200) in the HHO sample reported that they either were former smokers or had smoked for "most of their life," compared to 69.2% (701) of the men. Approximately 5% (34) of male smokers smoked exclusively cigars or pipes and were not used in this study. There were 1756 individuals who answered the SMQ items analyzed in this study; of these, 1138 (65%) were women and 618 were men.

Respondents with SMQ data were born during the years 1899 to 1941. The age range at the time of response was 50 to 91, with a mean age of 65.9 years and a standard deviation of 7.3 years. Female respondents (mean age, 65.4 years; SD, 7.3 years) were younger on average than males (mean, 66.9 years; SD, 7.3).

Determination of Zygosity

Questionnaires were returned by both members of 1472 pairs; zygosity was determined for 1409 pairs. Zygosity was assigned based upon the answers to two questions on physical similarity contained in the original questionnaire. The first item asked how often the twins had been mistaken for each other as children (rarely, sometimes, frequently). The second item described the degree of resemblance for identical and fra-

PM3001487756

Source: https://www.industrydocuments.ucsf.edu/docs/pyyj0001

ternal twins, with respondents asked which category best applied in their case. This information has been shown to be capable of determining zygosity in same-sex twins with approximately 95% accuracy (Cederlof *et al.*, 1961; Eaves *et al.*, 1989; Kasriel and Eaves, 1976).

When both twins stated that they were identical and neither said that they were rarely mistaken for each other, the twins were classified as monozygotic (MZ). If one twin said that they were identical and no other information was available, zygosity was coded as missing. If either twin said that they were fraternal, or that they were rarely mistaken for their twin, the pair was classified as dizygotic (DZ). Using this classification scheme, errors in assignment are most likely to be in the direction of identifying MZ twins as DZ pairs. Twins of opposite sex were automatically classified as dizygotic.

The typical response pattern of volunteer twin research (Lykken *et al.*, 1978) applies to this sample: there are substantially more women (74%) then men, and more MZ twins (56%) than DZ twins, among those where zygosity was established.

Of the 1756 individuals with sufficient data on the SMQ, 780 were members of classified twin pairs. Of these, 68 were MZ males, 168 were MZ females, 24 were DZ males, 73 were DZ females, and 57 were DZ opposite-sex twin pairs. The genetic analyses are based on these 390 pairs.

Measures

Motives for smoking were obtained from a modified version of Russell's Motives for Smoking Questionnaire (SMQ; Tate *et al.*, 1994) based on the three highest-loading items from each of Russell's six factors (Russell *et al.*, 1974). Three other items from the original questionnaire were retained and 4 items were added in order to identify two possible factors of Sedative smoking and Weight Control, resulting in a 25-item questionnaire (Appendix). Weight Control items have not been reported previously using this questionnaire but are similar to Food Substitution items in McKennell's 1970 analysis. Responses for each item ranged from 0 to 3, corresponding to answers of "not at all," "a little," "quite a bit," and "very much."

Not including pipe or cigar smokers, there were 1456 subjects who responded to every question on the Motives for Smoking scale. To optimize the number of twin pairs available while minimizing the number of items we allowed to be unanswered by individuals, we examined the relationship between these variables. Allowing up to 3 unanswered items (of 25) increased our sample size from 269 to 390 twin pairs, whereas increasing the number of unanswered items to as many as 5 added only 2 further twin pairs.

We therefore included those cases with up to three unanswered questions, increasing the number of individuals to 1756. Those who left three or fewer questions blank (300 cases: 190 missing one answer, 86 missing two answers, and 24 missing three answers) were assigned a score of 0 on those questions. The final question, "I get pleasure from deeply inhaling cigarette smoke," was the most frequently skipped item by both men (2.4%) and women (3.0%). Otherwise, there was no pattern in the missing data by item order or motive category. The same items loaded similarly on the same factors whether examining subjects with complete data or adding those subjects with missing responses keyed to 0.

For the genetic analyses, the items for each of the four hypothetically distinct factors of Addiction, Sedation, Stimulation, and Automatic smoking were added together (not including item 17), and to control for the effects of age and sex, regression residuals of these sum scores were analyzed.

Genetic Analyses

Genetic analysis provides a method for decomposing familial covariance matrices of observed, or phenotypic, behaviors into factors due to genes (*A*), shared environment (*C*; environmental influences that cause family members to resemble one another), and nonshared environment (*E*; environmental influences that cause family members to differ from each other; this component includes errors of measurement). Twin-analysis estimates of genetic causes of variation in phenotypic behavior can be derived because MZ twins have identical genes, whereas DZ twins share, on average, half their segregating genes.

Similarly, the relationships among traits can be decomposed to determine the degree to which different behaviors are influenced by the same sets of genes, the same shared environmental experiences, or the same nonshared environmental effects (Kendler, 1993). The same nonshared environmental influences account for traits that correlate in individual responses but not within twin pairs. Again, the latter effect would include correlated errors of measurement.

The initial approach to the multivariate analyses was to examine a Cholesky, or triangular, decomposition of the covariance matrices (Fig. 1a). A full Cholesky model has the advantage of explaining all the covariance

PM3001487757

Source: https://www.industrydocuments.ucsf.edu/docs/pyyj0001

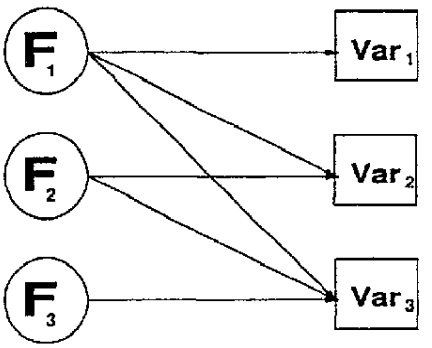

Cholesky

Fig. 1a. A Cholesky, or triangular, decomposition. F, factor; Var, variable.

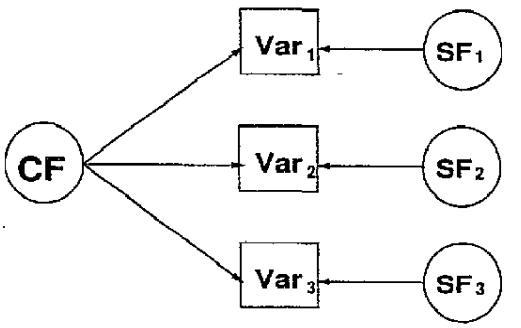

Common Factor

Fig. 1b. A common-factor structure. CF, common factor; SF, specific factor. Genes, shared environment, and nonshared environment are each represented by a Cholesky or a common-factor structure.

among variables and can thus be used as a base point to test simpler models. In a full Cholesky, three such decompositions are fitted for genes, shared environment, and nonshared environment.

Here, the Cholesky was compared to common-factor models including specific influences for each variable. In the latter model, common factors explain the covariance among variables, while factors additional to the common factors explain specific variance for each individual variable (Fig. 1b).

The parameters of a common-factor model are not a subset of the Cholesky parameter set, and thus there is not a direct test of the statistical significance of the reduction in parameters going from a Cholesky to a common-factor model. However, the adequacy of these two unique models can be compared by taking into account their relative parsimony.

Sex-Limitation Models

With information on opposite-sex twin pairs, it is possible to analyze sex-limitation models (Neale and Cardon, 1992). Sex-limitation models can be used to assess whether the magnitude of genetic or shared environmental effects differs for men and women. A sex-limitation version of a common-factor model is shown in Fig. 2. This model posits that common factors explain genetic (A_f), shared environmental (C_f), and nonshared environmental (E_f; not shown for simplification) covariation among the variables, while allowing specific factors to explain genetic (A_{sk}), shared environmental (C_{sk}), and nonshared environmental (E_{sk}) variation unique to each variable.

The genetic correlation (r_g) is fixed at 1.0 for MZ twins and .5 for DZ twins. The shared environmental correlation (r_c) is fixed at 1.0 for both types of twins. To test for differences in the magnitude of effects between sexes, the parameter estimates are allowed to differ for men (h_i, c_i, e_i) and women (h_i', c_i', e_i'). This model is compared to a model where the parameters are constrained to be equal for men and women (Neale and Cardon, 1992).

Maximum-likelihood estimates of genetic and environmental parameters were fitted and tested using Mx (Neale, 1991). Differences between goodness-of-fit chi-squares for each model, based on the change in the number of degrees of freedom as parameters are added or dropped, were used to test for significance of individual parameters.

Similar to the difference chi-square, Akaike's information criterion (AIC; Akaike, 1987) reflects both the goodness of fit and the parsimony of the model. AIC is calculated as the chi-square minus twice the degrees of freedom. When comparing models, the model with the more *negative* AIC value indicates a better fit. Although the difference chi-square was used to test for significance in nested models, the AIC is shown for ease of interpretation; the difference chi-squares are readily calculated from the degrees of freedom and chi-squares given for each model.

PM3001487758

Source: https://www.industrydocuments.ucsf.edu/docs/pyyj0001

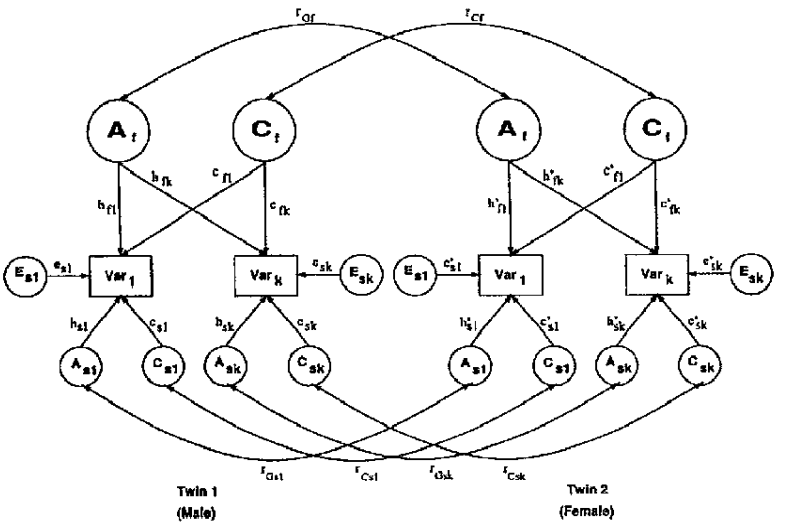

Fig. 2. A sex-limitation version of a common-factor genetic model. Parameter estimates for genetic (G), shared environmental (C), and nonshared environmental (E) influences due to specific (s) or common factors (f) can be calculated separately for men (h, c, e) and women (h', c', e'). The genetic correlations (r_{Gf}) are fixed at 1.0 for MZ twins and at .5 for DZ twins. The shared-environment correlations (r_{Cf}) are fixed at 1.0 for both twin types. The nonshared environmental common factor is not shown here for the purpose of simplification.

Testing Parameters

The significance of parameters can be tested by removing them from the model and comparing the chi-square of the reduced model with that of the augmented model, taking into account the change in the degrees of freedom. The hypotheses we tested for the proposed pharmacological motives were (a) whether genetic factors or shared environment explained a significant amount of the variance in the pharmacological motives for smoking, (b) whether one common factor was sufficient to explain the variance due to either genetic or shared environmental variance, (c) whether the magnitude of the parameter estimates differed by sex, and (d) whether genes or environment, specific factors, or common-factor loadings were the source of the separate phenotypic factor for Automatic smoking.

In model-fitting, the genetic factor was assessed by a priori models: (1) whether the magnitude of effects could be equated for each sex, (2) whether additional, or specific, genetic factors were necessary, and (3) whether any genetic factor at all was necessary to explain the covariances among twins.

The shared environment effect was then analyzed, testing whether the magnitude of effects could be equated across sex and whether specific factors could be eliminated. In these data, the specific factors could not all be dropped.

Because the nonshared environment could not be reduced from a full Cholesky to a common-factor model, the full Cholesky was retained for nonshared environment throughout subsequent model-fitting.

Other Statistics

Heritability (h^2), a widely used estimate of the magnitude of genetic influences, is a measure of the proportion of phenotypic variance explained by genetic differences among people. Similarly, shared environmentality (c^2) is the proportion of phenotypic variance accounted for by shared environment, and nonshared environmentality (e^2) is the proportion of the variance in the phenotype explained by the nonshared environment. These estimates can be calculated as the sum of the squared standardized path coefficients deriving from each component. The genetic or environmental correlations between any two variables can be calculated by multiplying the standardized path coefficients that link them and summing the links.

PM3001487759

Source: https://www.industrydocuments.ucsf.edu/docs/pyyj0001

Because the latent factors are assumed to be uncorrelated within an individual in these models, the matrix of genetic variances and covariances is estimated as

$$\mathbf{A} = \mathbf{F_G F_{G'}}$$

where $\mathbf{F_G}$ is the $n \times m$ matrix of loadings of the n observed variables on the m genetic factors.

Genetic correlations can be derived by standardizing the elements of A as

$$r_{gij} = a_{ij} / (a_{ii} \times a_{ij})$$

(Neale and Cardon, 1992, p. 248). Environmental correlations can be similarly derived.

RESULTS

Factor Analysis

Principal-factor analysis, starting with squared multiple correlations as the prior communality estimates, was used to extract the principal factors from the 25 items on the Motives for Smoking Questionnaire for the sample of 1756 subjects (SAS, 1990). Promax oblique rotation was used to allow the rotated factors to correlate. Initial extraction generated five factors by the criterion of eigenvalues greater than 1.0 (Kaiser, 1974), and examination of the scree plot confirmed the appropriateness of this number. To test the equivalency of the factor structure for men and women and for former and current smokers, the factor loadings were estimated using Mx for the groups separately and together. Although the difference chi-square was significant for both tests, the same five factors, consisting of the same items, emerged for all subsets.

Although five factors appeared to explain the data best, the structure was examined from two to eight factors. When additional factors were estimated, the structure began to disintegrate into single-item or double-item factors with factor loadings less than .50. With fewer factors, multiple loadings greater than .30 emerged, and interpretation became less clear. The Automatic smoking and Weight Control questions were the most stable factors, retaining their identity from a three-factor solution through an eight-factor solution.

The five-factor solution for the Motives for Smoking scale is shown in Table I. The first factor loads on

Table I. Five-Factor Solution for Smoking Motives Items

Item No.	PHARM	AUTO	PSYC	WGHT	INDU	Source
16	.79					SED
21	.74					SED
5	.71					SED
22	.70					ADD
7	.63					ADD
24	.54					STIM
15	.53					STIM
6	.44					STIM
25	.41					ADD
23		.82				AUTO
8		.79				AUTO
11		.71				AUTO
14			.77			SOC
10			.76			SOC
9			.42			SENS
18			.39			SOC
3			.36			SENS
17			.34			ADD
1						SENS
12				.89		WGHT
4				.75		WGHT
20				.66		WGHT
2					.64	INDU
13					.63	INDU
19					.55	INDU

Note: Standardized regression coefficients; factor loadings less than .30 are not shown.

PM3001487760

Source: https://www.industrydocuments.ucsf.edu/docs/pyyj0001

items from the Sedative, Addictive, and Stimulative scales, all considered components of a pharmacological dimension. The Social and Sensorimotor items combined to form the third factor. The other three factors, Automatic, Weight Control, and Indulgent smoking, were composed of their predicted items. The only item which loaded on an unpredicted factor was item 17 ("Without a cigarette I don't know what to do with my hands"). Although this item had loaded on Russell's Addictive scale, he expected it to load on the Sensorimotor factor (Russell *et al.*, 1974), and an original version of the item loaded on McKennell's Social Confidence factor (1970). This item also loaded on the Sensorimotor scale in Tate *et al.*'s analysis (1994). Therefore, this particular item should not be considered an indicator of Addictive smoking.

Although distinct, interpretable factors emerge in this analysis, the interfactor correlations (Table II) are higher than those reported by Russell *et al.* (1974) and Tate *et al.* (1994). The interitem reliability of the Motives for Smoking questions produced a Cronbach's α of .92, and only two items (Nos. 3 and 19) correlated at less than .40 with the item total. In addition, all but those same two items had loadings greater than .30 on the first unrotated factor, which accounted for 35% of the variance. A high coefficient α, however, does not necessarily indicate that scale items are unidimensional, but can be interpreted as the lower bound of the proportion of variance in scores explained by common factors underlying item performance (McDonald, 1981).

A second-order factor analysis was performed to test for the presence of the hypothesized pharmacological and nonpharmacological dimensions and to determine where the Weight Control scale loaded. The predicted second-order factor structure did not emerge using only five factors, but could be recovered using the eight hypothetical scales. The original scales were modified to conform to the results of the factor analysis: Item 1 ("I smoke for the pleasure of having something to put in my mouth") was not included, as it did not load specifically on any one factor, and Item 17 was included on the Sensorimotor rather than the Addictive scale. Each scale thus consisted of three items. The hypothesized scales for Sedative, Stimulative, Addictive, and Automatic smoking formed one factor, whereas Social, Sensorimotor, and Indulgent smoking clustered together. Weight Control loaded about equally on both factors.

Table II. Interfactor Correlations for Smoking Motives

Factor	PHARM	AUTO	PSYC	WGHT	INDU
PHARM	—				
AUTO	.55	—			
PSYC	.55	.42	—		
WGHT	.44	.26	.31	—	
INDU	.39	.23	.34	.26	—

Genetic Analyses of Hypothesized Pharmacological Scales

Although the factor analysis indicated that the Addictive, Sedative, and Stimulative motives constituted a single factor, it is possible for phenotypes to be controlled by different genetic systems and yet be correlated for environmental reasons. To examine this possibility, genetic and environmental parameters were fitted using the hypothesized pharmacological scales to determine whether the motives were indeed tapping the same genetic construct or if they had different origins. The primary test of this hypothesis is whether one common factor is sufficient to explain genetic variance. If specific genetic factors are necessary, then there is evidence for genetic pathways unique to particular motives.

Measuring gradations in practices such as smoking or drinking requires that the subjects have initiated use. We can not measure the potential for problems associated with alcohol in someone who has never had a drink. If the *degree* of use derives from the same factors which motivate initiation, then the results of genetic analyses using concordant pairs may be biased.

Comparing individuals from pairs where both twins smoked to those from pairs where only one twin ever smoked can give an indication of these associations. If the difference between concordant and discordant pairs depends on the twin type, then we can infer an influence of genetic or shared environmental factors.

Analysis of variance was used to test if there were mean differences between twins from pairs concordant for smoking and twins from discordant pairs and whether the interaction of concordancy and twin type was significant.

There is some evidence that the four hypothesized pharmacological motives for smoking are related to the initiation of smoking. Smokers from pairs of twins discordant for ever smoking tend to have slightly lower scores on the SMQ scales than twins from concordant pairs. Although significant, the effects are small, with the largest R^2 at .02.

PM3001487761

Source: https://www.industrydocuments.ucsf.edu/docs/pyyj0001

There was no difference between MZ and DZ twins on the scales, and the interaction was not significant. Given the smallness of the effect and the lack of an interaction implying genetic effects, it is unlikely that the results of the biometrical analyses would be much affected.

Results of model fitting are shown in Table III. A full Cholesky triangular decomposition, which accounts for all the variance and covariance, was used as the benchmark (Model 1). Reducing genetic and shared environmental effects to common factor form with specific factors loading on each variable resulted in a more parsimonious fit (Model 2). The full Cholesky decomposition was retained for unshared environmental effects, which could not be reduced to one common factor. Subsequently, the adequacy of more parsimonious factor models was assessed by the difference chi-square goodness-of-fit test.

The magnitude of the genetic influences could be equated across sex; that is, the parameter estimates were not significantly different for men and women (Model 3). All specific factors could be dropped from the genetic model; therefore, one common factor was sufficient to account for the genetic effect on the pharmacological motives (Model 4). Genetic influences could not be completely dropped from the model without significant loss of fit (Model 5).

It was not possible to equate across sex the magnitude of shared environmental influences for all the variables (Model 6), nor was it possible to drop all of the specific factors (Model 7). Specific shared environmental factors could be dropped for all variables except for Automatic smoking (Model 8). The inability to equate the magnitude of loadings across sex was due to Automatic smoking; the parameter estimates for Addictive, Stimulative, and Sedative smoking could be equated for men and women when allowing Automatic smoking to differ (Model 9). The specific loadings for Automatic smoking could not be equated (Model 10). It was not possible to equate nonshared environmental influences across sex (Model 11).

Figures 3a and 3b show the standardized parameter estimates for men and women from Model 9. For simplification, the nonshared environment Cholesky parameters are not shown. The values for the equated parameters differ slightly because of differences in overall phenotypic variance between men and women. The figures illustrate the relationship among the one common genetic factor and the four pharmacological variables. It can be seen that the main difference between

Table III. Model-Fitting for Hypothesized Pharmacological Motives

Model	χ^2	df	p	AIC
(1) Full Cholesky	147.84	120	.043	−92.2
(2) Common and specific factors for genes & for shared environment; Cholesky for unshared environment	152.49	128	.069	−103.5
(3) Equate genetic loadings across sex (vs. Model 2)	157.42	136	.101	−114.6
(4) Drop specific genes (vs. Model 3)	157.70	140	.146	−122.3
(5) Drop genetic factor (vs. Model 4)	172.73	144	.052	−115.3*
(6) Equate shared environment loadings across sex (vs. Model 4)	180.84	148	.034	−115.2*
(7) Drop specific factors for shared environment (vs. Model 4)	184.23	148	.023	−111.8*
(8) Drop specifics for shared environment excluding AUTO (vs. Model 4)	168.78	146	.095	−123.2
(9) Equate loadings for shared environment common factor excluding AUTO (vs. Model 8)	169.52	149	.120	−128.5
(10) Equate specific factor loadings for AUTO (vs. Model 9)	179.03	150	.053	−121.0*
(11) Equate unshared environment across sex (vs. Model 9)	218.04	159	.001	−100.0*

* Indicates significant loss of fit by difference chi-square (not shown). Parameters are returned to model, so that subsequent models are compared to last model which did not decrease goodness of fit.

PM3001487762

Source: https://www.industrydocuments.ucsf.edu/docs/pyyj0001

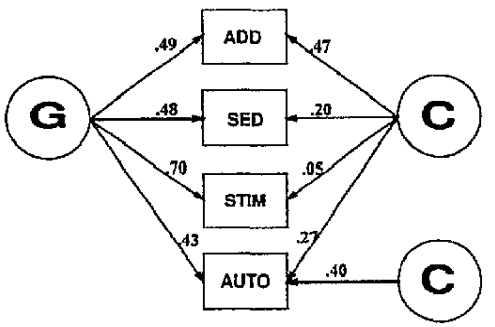

Women

Fig. 3a. Genetic and shared environmental effects on hypothesized pharmacological smoking motives for women (standardized parameter estimates) from Model 9.

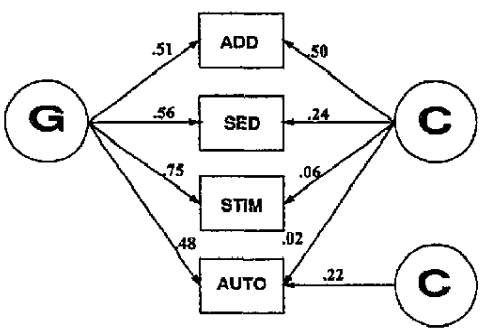

Men

Fig. 3b. The same effects for men. For purposes of simplification, nonshared environmental influences are not shown for either sex. *G*, genetic influences; *C*, shared environmental influences.

men and women in shared-environmental influences is that there is a positive relationship between Automatic smoking and the common factor for women, whereas Automatic smoking is not related to the common factor for men.

Heritability and environmentality estimates from the multivariate model are shown in Table IV. In general, at least half of the phenotypic variance in the motives for smoking is accounted for by nonshared environmental

Table IV. Heritability and Environmentality Estimates for Pharmacological Motives

	Women			Men		
Scale	h^2	c^2	e^2	h^2	c^2	e^2
Addictive	.24	.22	.53	.27	.25	.48
Sedative	.23	.04	.73	.32	.05	.63
Stimulative	.49	.00	.51	.56	.00	.44
Automatic	.18	.23	.58	.23	.05	.72

Note: Parameters estimated from Model 9, Table IV. h^2, proportion of phenotypic variance due to genetic effects; c^2, proportion of variance due to shared environment; e^2, proportion of variance due to nonshared environment.

effects. There are negligible effects of shared environment on the Sedative and Stimulative scales. Twin resemblance for Addictive smoking is about half genetic and half shared environment. The shared environment effect for Automatic smoking is greater for women than for men.

DISCUSSION

The factors that emerged from principal-factor analysis of the Motives for Smoking questionnaire items were reasonable and interpretable, and the item associations conformed to hypothesized pharmacological and nonpharmacological dimensions in the motives for smoking. Sedative, Stimulative, and Addictive smoking formed one factor, termed Pharmacological. Automatic smoking, also considered to have pharmacological origins, was a separate factor. Social and Sensorimotor items merged into a Psychological factor. Indulgent and Weight Control factors were composed of their predicted items. Interfactor correlations ranged from .23 to .55.

Another study that used most of these same items in a principal-components analysis (Tate *et al.*, 1994) recovered seven factors, including Sedative smoking. The Sedative factor has been the least stable of the motives. In the analysis by Russell *et al.* (1974), the two Sedative items loaded on Stimulative and Addictive factors. Sedative smoking, retrieved as a separate factor, correlated at .58 with the Addictive factor and .41 with Stimulative smoking in the Ikard *et al.* (1969) study.

Although the merger of Addictive, Stimulative, and Sedative smoking into one factor suggested phenotypic similarity, it is possible for items to correlate for environmental reasons and yet have different genetic origins. Twin analyses were used to test the relative contribu-

PM3001487763

Source: https://www.industrydocuments.ucsf.edu/docs/pyyj0001

tions of genes and shared environment to the variance among the four proposed pharmacological scales.

Results of model-fitting showed that both genes and shared environment significantly influenced individual variation in the hypothesized Addictive, Sedative, Stimulative, and Automatic scales. The genetic variation in these motives was explained by a single common factor. There was no evidence of unique genetic pathways operating on the hypothetically discrete motives.

Automatic smoking, which maintained a unique identity through all analyses of the phenotypic factor structure, showed distinct and specific differences in shared environmental influences. It was necessary to retain a specific factor to explain shared environmental influences on Automatic smoking, and the magnitude of the influence of this specific factor could not be equated across sex. Automatic smoking also accounted for the difference between men and women in the shared-environment common factor. Thus, in these models, the responses for Automatic smoking were differentially affected by shared environment depending on sex.

For the hypothesized motives of Sedative, Stimulative, and Addictive smoking, which merged into a single factor in the phenotypic principal-factor analysis, the effects of genes and shared environment were accounted for by a single common factor each, and the magnitude of the estimates were not significantly different for men and women. Therefore, these theoretically distinct motives were not distinguished either phenotypically or genetically in this sample.

Because motives for smoking may converge as a function of use across time, it is possible that these results would be different for a sample of novice smokers. There also may be biases due to restrospective reporting by former smokers; however, in the phenotypic analysis, the same factors composed of the same items emerged for both former and current smokers. Reliability coefficients over a 3-year interval on a questionnaire similar to the SMQ showed negligible differences between former and current smokers (Costa *et al.*, 1980), and within age cohorts, there were no significant differences between former and current smokers on an addictive-type scale (Bosse *et al.*, 1980).

The specific pharmacological motives, measured using Ikard's (1969) Reasons for Smoking scale, have shown limited discriminative validity when compared to laboratory and environmental measures of smoking behavior or individualized cessation techniques (for reviews see Shiffman, 1993; Tate *et al.*, Stanton, 1991). These findings have led to the suggestion that an overall pharmacological score is more relevant than the individual subtypes. Our results support this viewpoint.

With the exception of sex-specific environmental differences in Automatic smoking, this study did not find that the supposedly distinct motives tap different pharmacological events. The finding that one common factor accounted for the genetic influences on all four proposed pharmacological motives is consistent with the hypothesis that these motives represent individual differences in the same pharmacological pathway.

APPENDIX

Items from the Motives for Smoking Questionnaire by Hypothesized Constructs

Addictive

(7) When I run out of cigarettes I find it almost unbearable until I can get them.
(17) Without a cigarette I don't know what to do with my hands.
(22) I get a real gnawing hunger to smoke when I haven't smoked for a while.
(25) I get pleasure from deeply inhaling cigarette smoke.[a]

Stimulative

(6) I like smoking when I am busy and working hard.
(15) I get a definite lift and feel more alert when smoking.
(24) I smoke more when I am rushed and have lots to do.

Sedative

(5) I smoke more when I am worried about something.[a]
(16) Smoking calms me down when I feel tense.[b]
(21) I light up a cigarette when I feel angry about something.[a]

Automatic

(8) I've found a cigarette in my mouth without recalling putting it there.
(11) I light up a cigarette without realizing I still have one burning in the ashtray.

[a] Items from the original scale that were not in the top three loadings.
[b] New items.

PM3001487764

Source: https://www.industrydocuments.ucsf.edu/docs/pyyj0001

(23) I find myself smoking without remembering lighting up.

Social

(10) It is easier to talk and get on with other people when smoking.
(14) While smoking I feel more confident with other people.
(18) I smoke much more when I am with other people.

Sensorimotor

(1) I smoke for the pleasure of having something to put in my mouth.
(3) Part of the enjoyment of smoking is watching the smoke as I blow it out.
(9) Part of the enjoyment of smoking comes from the steps I take to light up.

Indulgent

(2) I want to smoke most when I am comfortable and relaxed.
(13) I like a cigarette best when I am having a quiet rest.
(19) I usually only smoke when I can really sit back and enjoy it.

Weight Control

(4) I smoke to keep from gaining weight.[b]
(12) Smoking helps control my appetite.[b]
(20) I don't get so hungry when I smoke.[b]

Note: Item numbers are in parentheses.

REFERENCES

Akaike, H. (1987). Factor analysis and AIC. *Psychometrika* **52**: 317–332.

Boomsma, D. I., Koopmans, J. R., Van Doornen, L. J., and Orlebeke, J. F. (1994). Genetic and social influences on starting to smoke: A study of Dutch adolescent twins and their parents. *Addiction* **89**:219–226.

Bosse, R., Garvey, A., and Glynn, R. (1980). Age and addiction to smoking. *Addict. Behav.* **5**:341–351.

Carmelli, D., Swan, G. E., Robinette, D., and Fabsitz, R. R. (1992). Genetic influence on smoking: A study of male twins. *N. Engl. J. Med.* **327**:829–833.

Cederlof, R., Friberg, L., Jonsson, E., and Kaij, L. (1961). Studies on similarity diagnosis in twins with the aid of mailed questionnaires. *Acta Genet. Stat. Med.* **11**:338–362.

Clarke, P. S. S. (1987). Nicotine and smoking: A perspective from animal studies. *Psychopharmacology* **92**:135–143.

Costa, P. O., McCrae, R. R., and Bosse, R. (1980). Smoking Motive factors: A review and replication. *Int. J. Addict.* **15**:537–549.

Eaves, L. J., Eysenck, H. J., and Martin, N. G. (1989) *Genes, Culture and Personality: An Empirical Approach*, Academic Press, San Diego, CA.

Frith, C. D. (1971). Smoking behavior and its relation to the smoker's immediate experience. *Br. J. Soc. Clin. Psychol.* **10**:73–78.

Gilbert, D. G. (1979). Paradoxical tranquilizing and emotion reducing effects of nicotine. *Psychol. Bull.* **86**:643–661.

Heath, A. C. and Madden, P. A. F. (1995). Genetic influences on smoking behavior. In Turner, J. R., Cardon, L. R., and Hewitt, J. K. (eds.), *Behavior Genetic Approaches in Behavioral Medicine*, Plenum Press, New York.

Heath, A. C., and Martin, N. G. (1993). Genetic models for the natural history of smoking: Evidence for a genetic influence on smoking persistence. *Addict. Behav.* **18**:19–34.

Heath, A. C., Cates, R., Martin, N. G., Meyer, J., Hewitt, J. K., Neale, M. C., and Eaves, L. J. (1993). Genetic contribution to risk of smoking initiation: Comparisons across birth cohorts and across cultures. *J. Substance Abuse* **5**:221–246.

Hughes, J. R. (1986). Genetics of smoking: A brief review. *Behav. Ther.* **17**:335–345.

Ikard, F. F., Green, D. E., and Horn, D. (1969). A scale to differentiate between types of smoking as related to the management of affect. *Int. J. Addict.* **4**:649–659.

Kaiser, H. F. (1974). An index of factorial simplicity. *Psychometrika* **35**:401–415.

Kasriel, J., and Eaves, L. J. (1976). The zygosity of twins: Further evidence on the agreement between diagnosis by blood groups and written questionnaires. *J. Biosoc. Sci.* **8**:263–266.

Kendler, K. S. (1993). Twin studies of psychiatric illness: Current status and future directions. *Arch. Gen. Psychiatry* **50**:905–915.

Lykken, D. T., Tellegen, A., and DeRubeis, R. (1978). Volunteer bias in twin research: The rule of two-thirds. *Soc. Biol.* **25**:1–9.

Marks, M. J., Stitzel, J. A., and Collins, A. C., (1989). Genetic influenced on nicotine responses. *Pharmacol. Biochem. Behav.* **33**:667–678.

McDonald, R. P. (1981). The dimensionality of tests and items. *Br. J. Math. Stat. Psychol.* **34**:100–117.

McKennell, A. C. (1970). Smoking motivation factors. *Br. J. Soc. Clin. Psychol.* **9**:8–22.

Neale, M. C. (1991). *Mx: A Package for Statistical Modeling* (Box 3, Medical College of Virginia, Richmond, VA), Genetics and Human Development Technical Report.

Neale, M. C., and Cardon, L. R. (1992). *Methodology for Genetic Studies of Twins and Families*, Kluwer Academic, Dordrecht, The Netherlands.

Niaura, R., Goldstein, M. G., Ward, K. D., and Abrams, D. B. (1989). Reasons for smoking and severity of residual nicotine withdrawal symptoms when using nicotine chewing gum. *Br. J. Med. Psychol.* **84**:681–687.

Prescott, C. A., Hewitt, J. K., Heath, A. C., Truett, K. R., Neale, M. C., and Eaves, L. J. (1994). Environmental and genetic influences on alcohol use in a volunteer sample of older twins. *J. Stud. Alcohol* **55**:18–33.

Rimer B. K., Orleans, C. T., Keintz, M. K., Cristinzio, S., and Fleisher L. (1990). The older smoker: Status, challenges and opportunities for intervention. *Chest* **97**:547–553.

Russell, M. A. H., Peto, J., and Patel, U. A. (1974). The classification of smoking by factorial structure of motives. *J. Roy. Stat. Soc.* **137**:313–333.

SAS (1990). *SAS Statistics User's Guide*, Version 6, 4th ed., SAS Institute, Cary, NC.

Shiffman, S. (1993). Assessing smoking patterns and motives. *J. Consult. Clin. Psychol.* **61**:732–742.

Tate, J. C., Pomerleau, C. S., and Pomerleau, O. F., (1994). Pharmacological and non-pharmacological smoking motives: A replication and extension. *Addiction* **89**:321–330.

PM3001487765

Source: https://www.industrydocuments.ucsf.edu/docs/pyyj0001

Tate, J. C., Schmitz, J. M., and Stanton, A. L. (1991). A critical review of the Reasons for Smoking scale. *J. Substance Abuse* 3:441–455.

Tate, J. C., and Stanton, A. L. (1990). Assessment of the validity of the Reasons for Smoking scale. *Addict. Behav.* 15:129–135.

Tomkins, S. (1968). A modified model of smoking behaviour. In Borgatta, E. F., and Evans, R. R. (eds.) *Smoking, Health and Behaviour*, Aldine, Chicago.

West, R. J., Hajek, P., and Belcher, M. (1986). Which smokers report most relief from craving when using nicotine chewing gum. *Psychopharmacology* 89:189–191.

West, R. J., and Russell, M. A. H. (1985). Pre-abstinence smoke intake and smoking motivation as predictors of severity of cigarette withdrawal symptoms. *Psychopharmacology* 87:341–336.

Edited by Joanne Meyer

PM3001487766

Source: https://www.industrydocuments.ucsf.edu/docs/pyyj0001